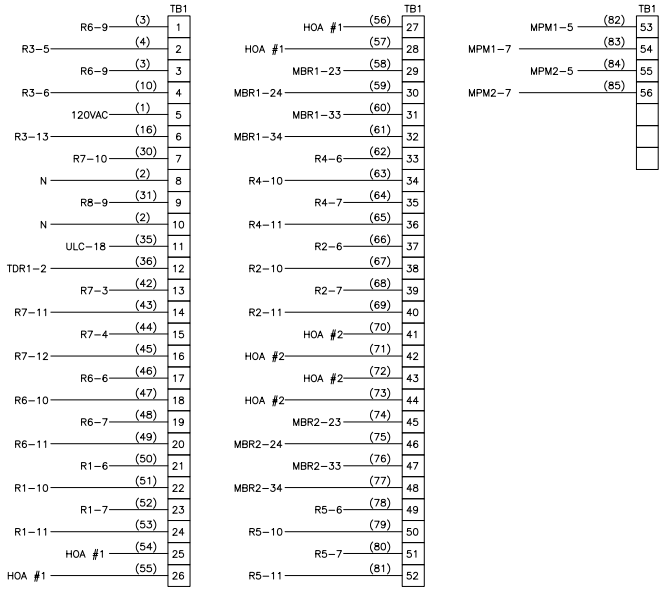

NOT DRAWN TO SCALE

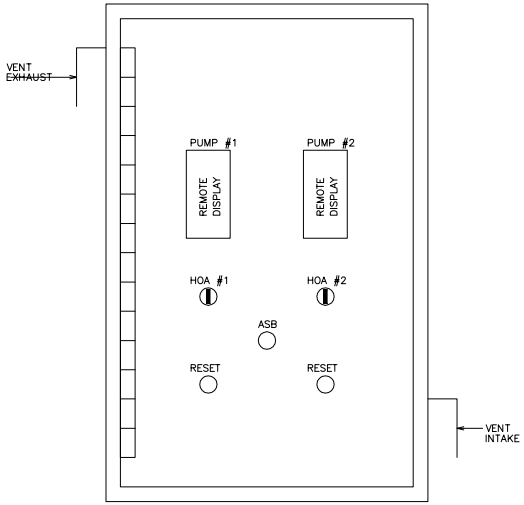

OUTER DOOR NOT SHOWN

BACK PLANE GENERAL LAYOUT

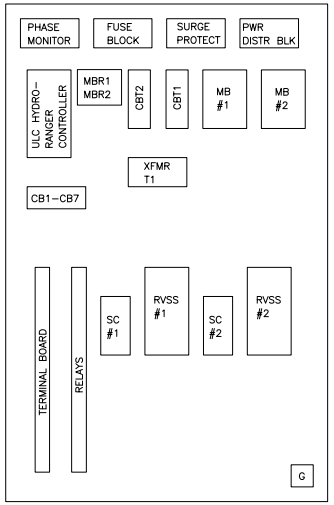

NOT TO SCALE

LEGEND

- R( ) – RELAY
- RELAY CIRCUIT
- CIRCUIT BREAKER
- HAND-OFF-AUTO SELECTOR
- FUSE
- EARTH GROUND
- TRANSFORMER
- MPM – MOTOR PROTECTION MODULE
- AR – ALTERNATING RELAY COIL
- TDR – TIME DELAY RELAY COIL
- FAN – VENTILATOR FAN ASSEMBLY
- ETM – ELAPSED TIME (HOUR) METER
- CURRENT TRANSFORMER
- PHASE MONITOR – PHASE MONITOR RELAY COIL

LIFT STATION – CONTROL PANEL 480V DUPLEX

USING RVSS MOTOR STARTERS HYDRORANGER (ULC) LEVEL CONTROL

(2 OF 2)

STANDARD CONSTRUCTION DETAILS

CITY OF Savannah
WATER RESOURCES AND PUBLIC WORKS BUREAU
Planning & Engineering

SCALE: N.T.S.
DATED: APR 2020
PLATE NUMBER: S24.4B