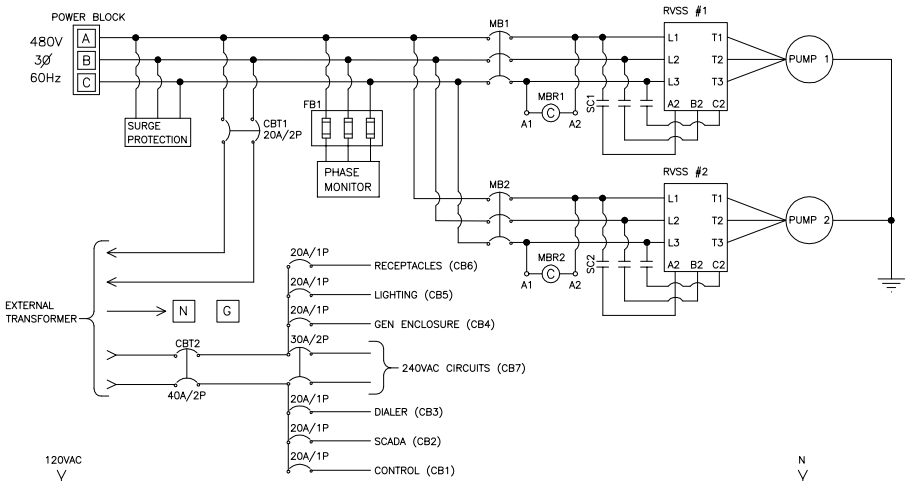

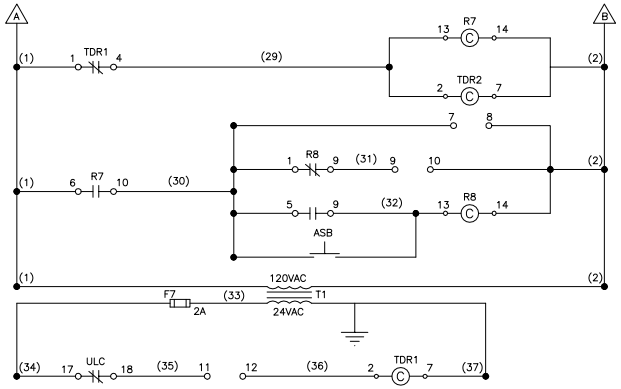

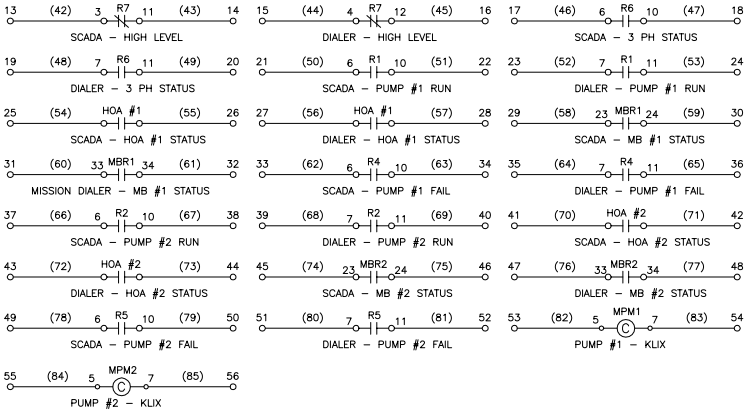

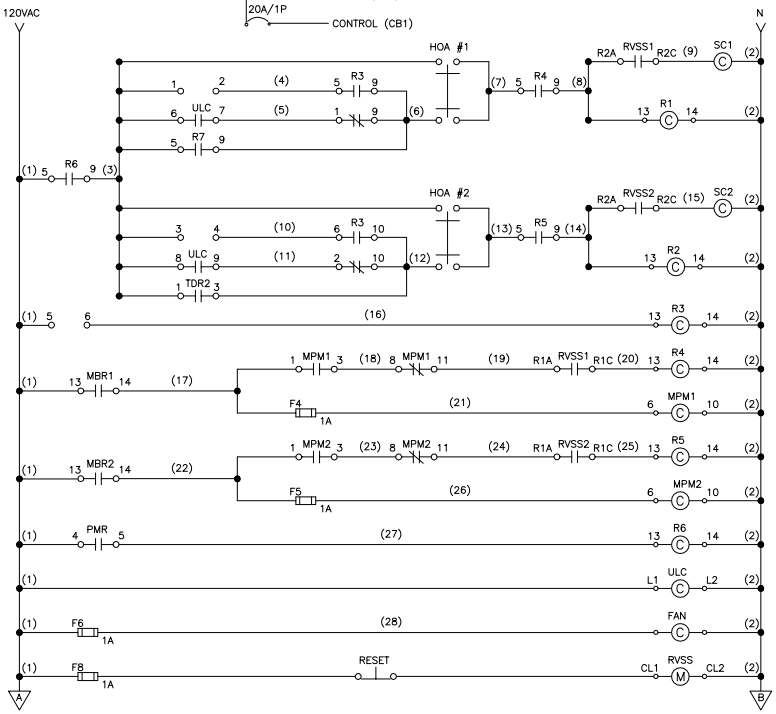

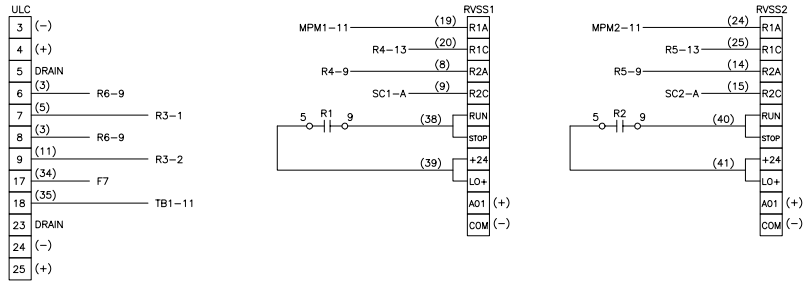

LIFT STATION – CONTROL PANEL 480V DUPLEX

USING RVSS MOTOR STARTERS HYDRORANGER (ULC) LEVEL CONTROL

(1 OF 2)

STANDARD CONSTRUCTION DETAILS

CITY OF Savannah
WATER RESOURCES AND PUBLIC WORKS BUREAU
Planning & Engineering

SCALE: N.T.S.

DATED: APR 2020

PLATE NUMBER: S24.4A