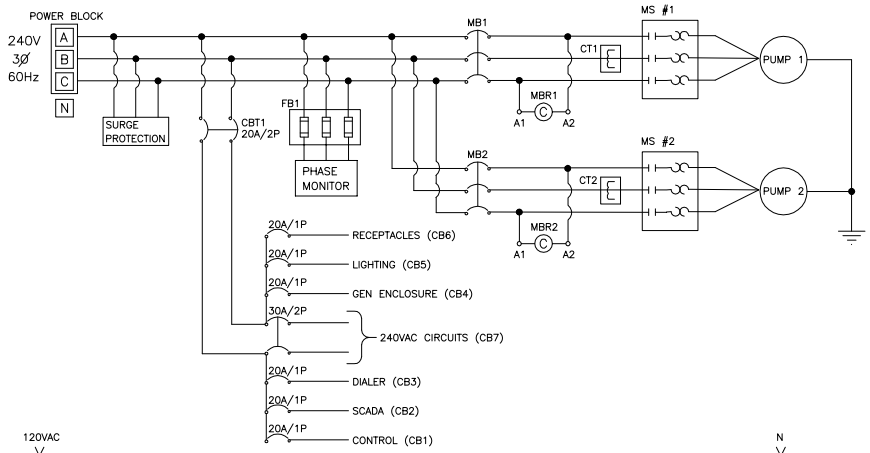

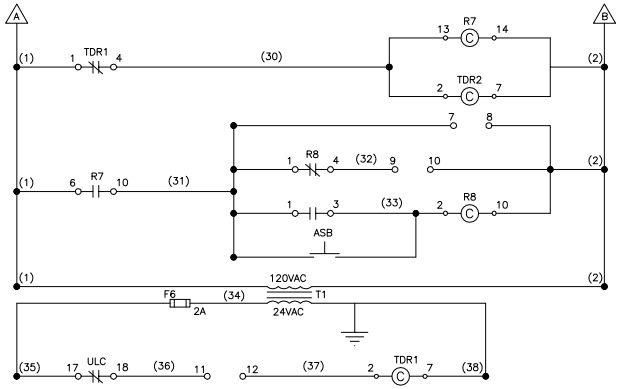

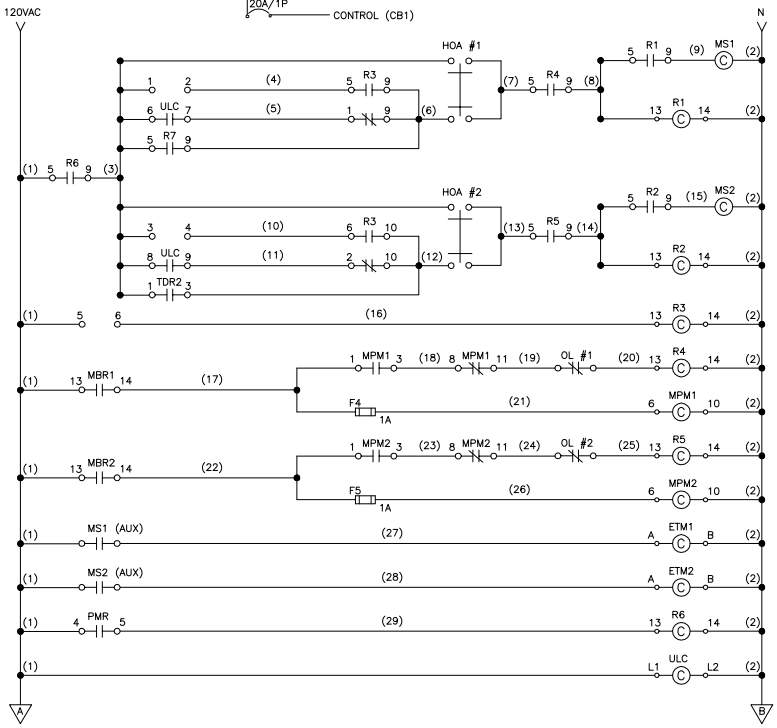

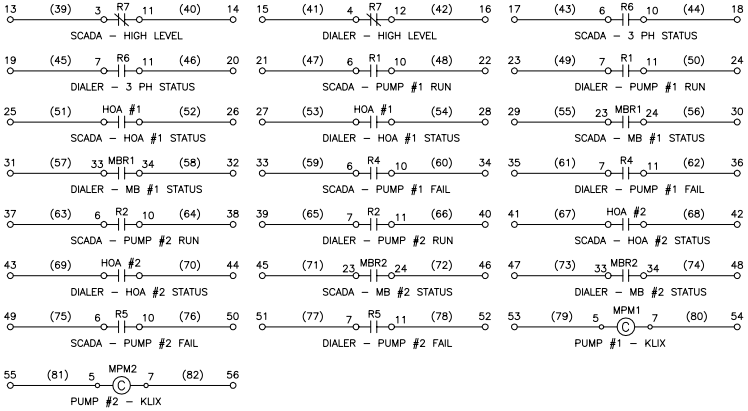

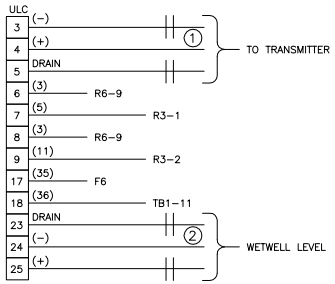

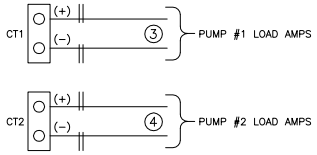

LIFT STATION – CONTROL PANEL 240V DUPLEX

USING NEMA MOTOR STARTERS HYDRORANGER (ULC) LEVEL CONTROL

(1 OF 2)

STANDARD CONSTRUCTION DETAILS

CITY OF Savannah
WATER RESOURCES AND PUBLIC WORKS BUREAU
Planning & Engineering

SCALE: N.T.S.
DATED: APR 2020
PLATE NUMBER: S24.3A