		TB1
R6-9	(3)	1
R3-5	(4)	2
R6-9	(3)	3
R3-6	(10)	4
120VAC	(1)	5
R3-13	(16)	6
R7-10	(31)	7
N	(2)	8
R8-4	(32)	9
N	(2)	10
ULC-18	(36)	11
TDR1-2	(37)	12
R7-3	(39)	13
R7-11	(40)	14
R7-4	(41)	15
R7-12	(42)	16
R4-6	(43)	17
R6-10	(44)	18
R6-7	(45)	19
R6-11	(46)	20
R1-6	(47)	21
R1-10	(48)	22
R1-7	(49)	23
R1-11	(50)	24
HOA #1	(51)	25
HOA #1	(52)	26

		TB1
HOA #1	(53)	27
HOA #1	(54)	28
MBR1-23	(55)	29
MBR1-24	(56)	30
MBR1-33	(57)	31
MBR1-34	(58)	32
R4-6	(59)	33
R4-10	(60)	34
R4-7	(61)	35
R4-11	(62)	36
R2-6	(63)	37
R2-10	(64)	38
R2-7	(65)	39
R2-11	(66)	40
HOA #2	(67)	41
HOA #2	(68)	42
HOA #2	(69)	43
HOA #2	(70)	44
MBR2-23	(71)	45
MBR2-24	(72)	46
MBR2-33	(73)	47
MBR2-34	(74)	48
R5-6	(75)	49
R5-10	(76)	50
R5-7	(77)	51
R5-11	(78)	52

		TB1
MPM1-5	(79)	53
MPM1-7	(80)	54
MPM2-5	(81)	55
MPM2-7	(82)	56

NOT DRAWN TO SCALE

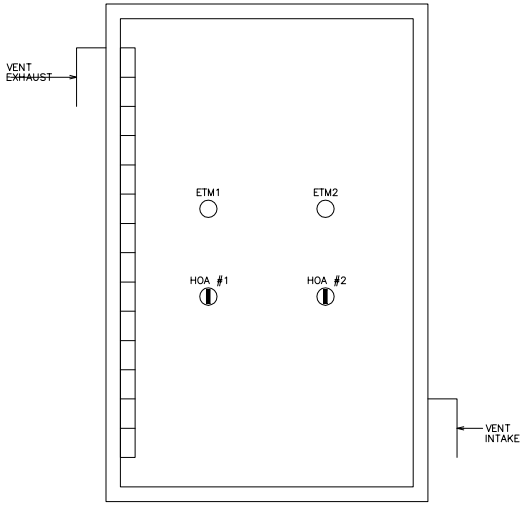

OUTER DOOR NOT SHOWN

BACK PLANE GENERAL LAYOUT

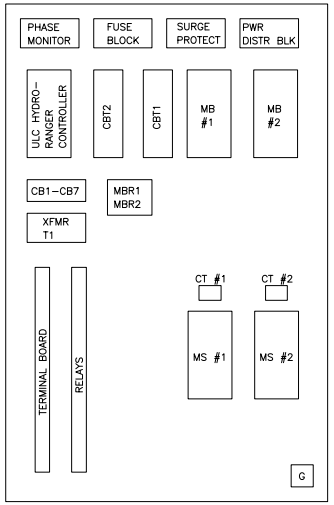

NOT TO SCALE

LEGEND

- R( ) – RELAY
- RELAY CIRCUIT
- CIRCUIT BREAKER
- HAND-OFF-AUTO SELECTOR
- FUSE
- EARTH GROUND
- TRANSFORMER
- MPM – MOTOR PROTECTION MODULE
- AR – ALTERNATING RELAY COIL
- TDR – TIME DELAY RELAY COIL
- FAN – VENTILATOR FAN ASSEMBLY
- ETM – ELAPSED TIME (HOUR) METER
- CURRENT TRANSFORMER
- PHASE MONITOR – PHASE MONITOR RELAY COIL

LIFT STATION – CONTROL PANEL 480V DUPLEX

USING NEMA MOTOR STARTERS HYDRORANGER (ULC) LEVEL CONTROL

(2 OF 2)

STANDARD CONSTRUCTION DETAILS

CITY OF Savannah
WATER RESOURCES AND PUBLIC WORKS BUREAU
Planning & Engineering

SCALE: N.T.S.
DATED: APR 2020
PLATE NUMBER: S24.2B