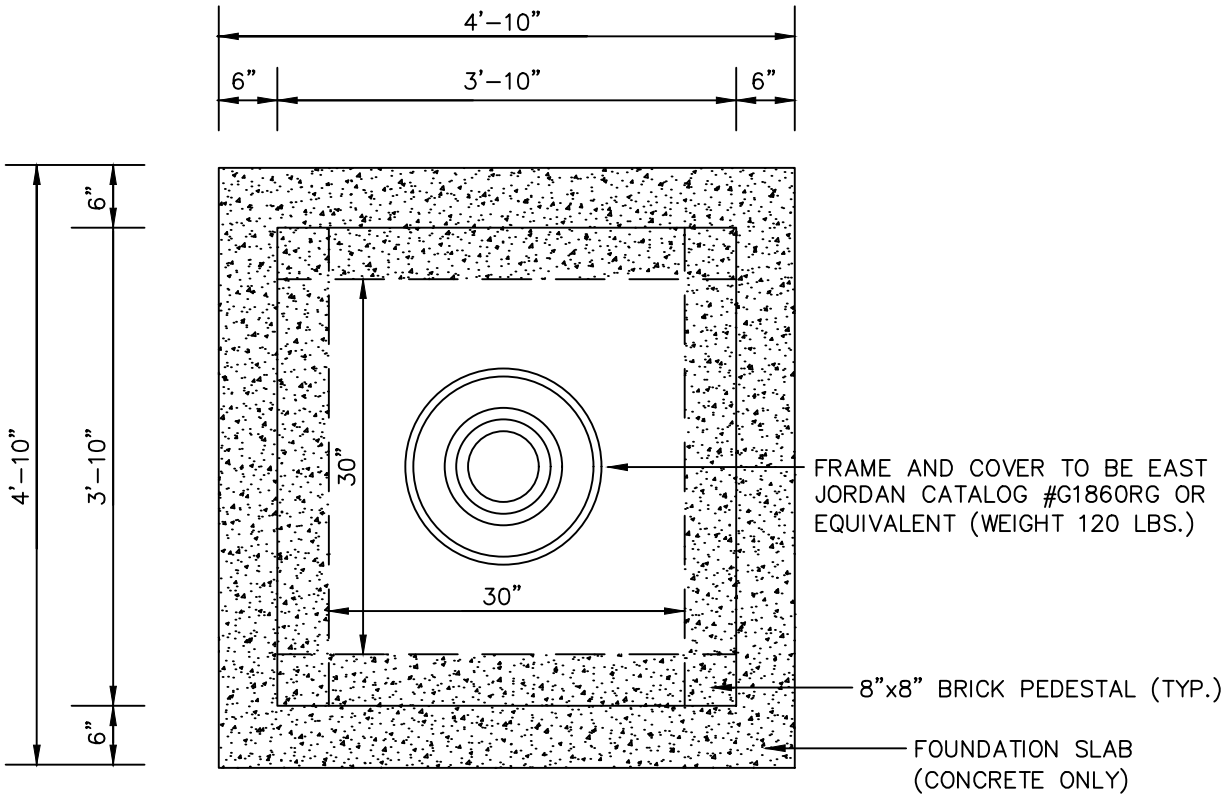

PLAN

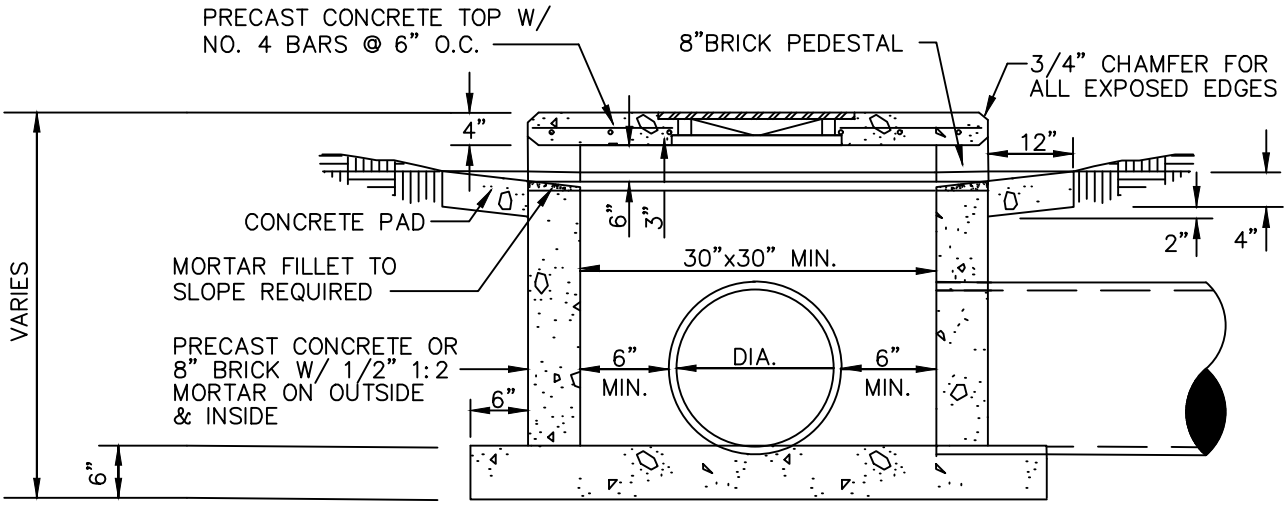

STANDARD CONSTRUCTION DETAILS

SAVANNAH
savannahga.gov

ROOF INLET

PLATE NUMBER: D6

APPROVED:

CITY ENGINEER

SCALE: N.T.S.

DATED: FEBRUARY 2019