NOTE:
C.I. MANHOLE FRAME AND COVER TO BE EAST JORDAN CATALOG #G1860RG OR EQUIVALENT (WEIGHT 120 LBS.). FRAME AND COVER TO BE MACHINE FITTED PRIOR TO LEAVING SHOP.

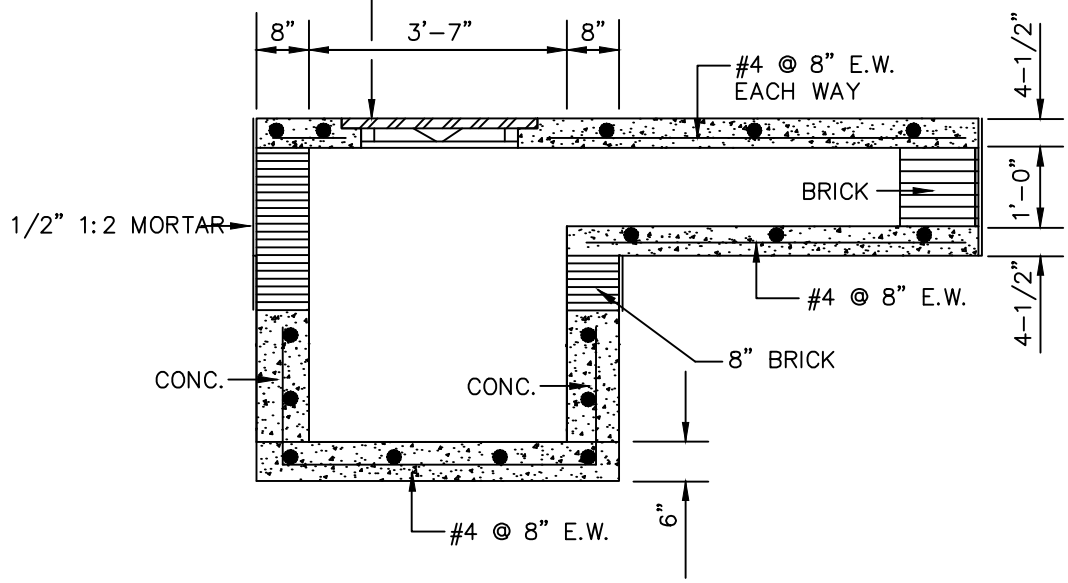

NOTES:
1. MATCH TOP OF PIPE ELEVATIONS WHEN DIFFERENT SIZE PIPES ARE CONSTRUCTED IN CURB INLET
2. TYPE "B" INLET SHOWN

STANDARD CONSTRUCTION DETAILS

SAVANNAH
savannahga.gov

CURB INLET SECTION B-B

PLATE NUMBER: D4

APPROVED:
CITY ENGINEER

SCALE: N.T.S.

DATED: FEBRUARY 2019