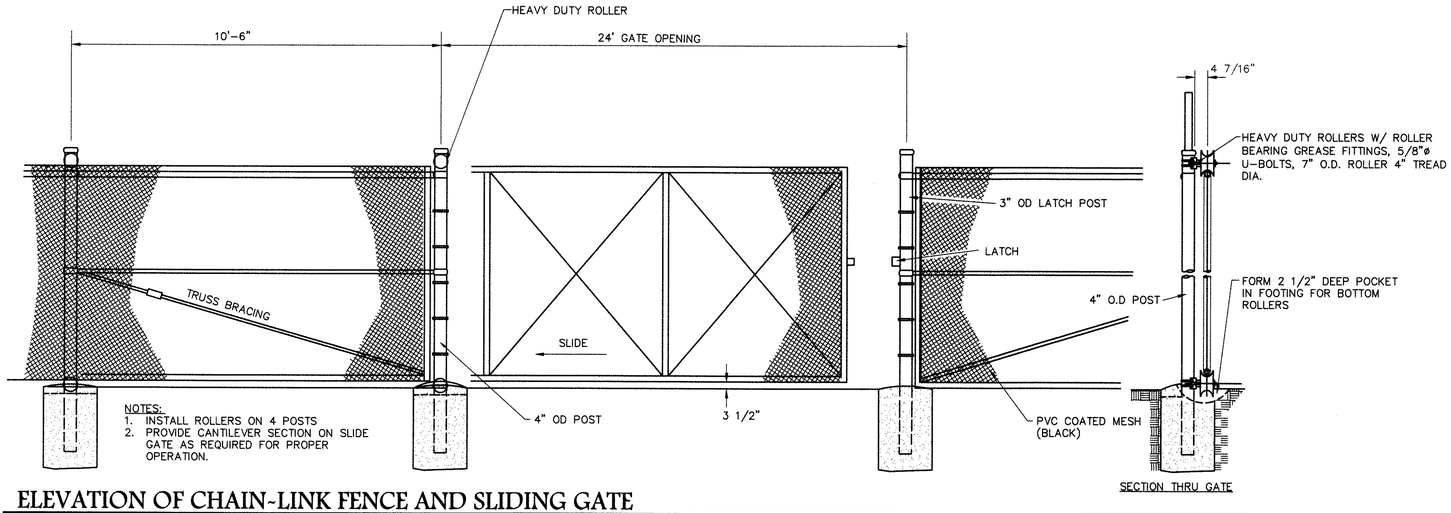

ELEVATION OF CHAIN-LINK FENCE AND SLIDING GATE

N.T.S.

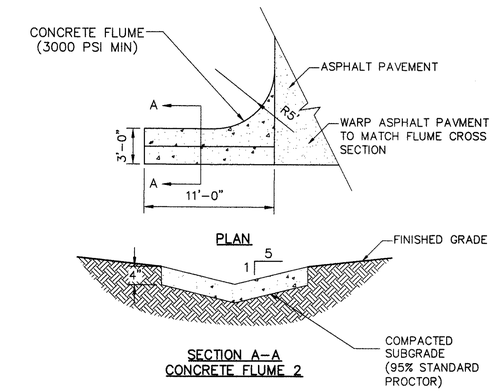

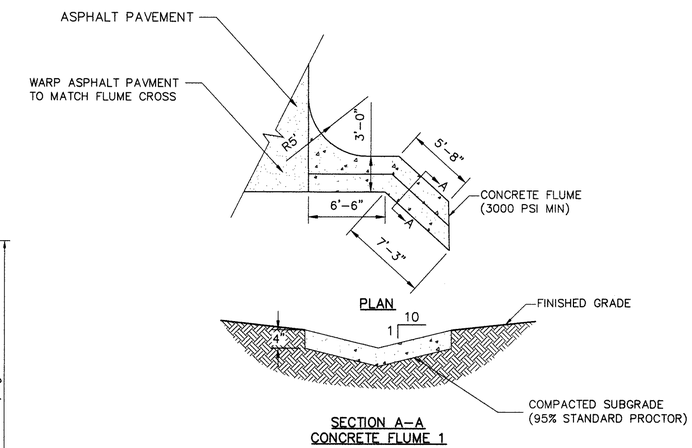

CONCRETE FLUME DETAILS

N.T.S.

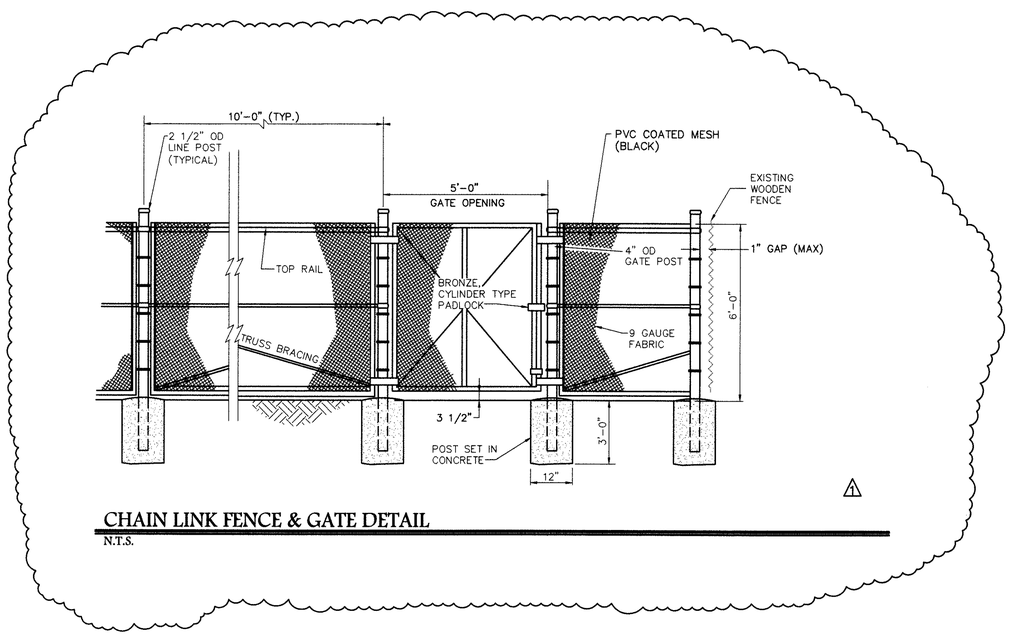

CHAIN LINK FENCE & GATE DETAIL

N.T.S.

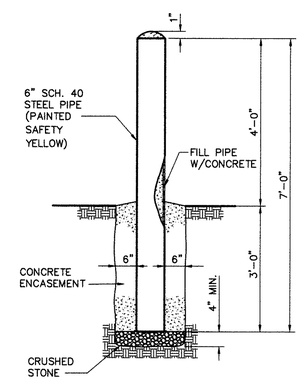

BOLLARD DETAIL

N.T.S.

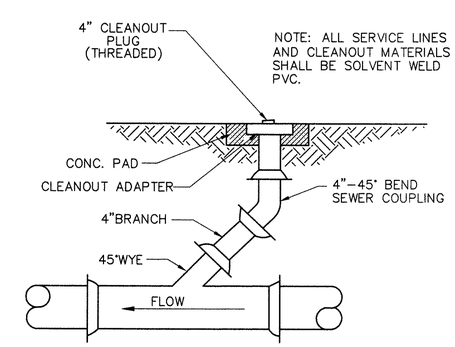

SANITARY SEWER CLEANOUT

N.T.S.

MISCELLANEOUS DETAILS

ATLANTIC COAST CONSULTING, INC.
7 E Congress Street
Suite 801
Savannah, GA 31401
o:912.236.3471
f: 912.236.3472
www.atlcc.net

GEORGIA REGISTERED PROFESSIONAL ENGINEER
Cert# 06950

WATKINS ASSOCIATES ARCHITECTS
35 Abercorn Street, Suite 220
Savannah, Georgia, 31401

THE CONCEPTS, DESIGNS, PLANS, SPECIFICATIONS, AND OTHER DOCUMENTS AS THE PROPERTY OF WATKINS ASSOCIATES ARCHITECTS, INC. DO NOT BE REPRODUCED, USED, OR DISCLOSED WITHOUT THE WRITTEN CONSENT OF WATKINS ASSOCIATES ARCHITECTS, INC. ANY REPRODUCTION OF THE PLANS, SPECIFICATIONS, OR OTHER DOCUMENTS, IN WHOLE OR IN PART, ARE PROHIBITED WITHOUT THE WRITTEN CONSENT OF WATKINS ASSOCIATES ARCHITECTS, INC. ANY REPRODUCTION, USE, OR DISCLOSURE OF THE PLANS, SPECIFICATIONS, OR OTHER DOCUMENTS WITHOUT THE WRITTEN CONSENT OF WATKINS ASSOCIATES ARCHITECTS, INC. SHALL BE PROHIBITED. THE PLANS, SPECIFICATIONS, OR OTHER DOCUMENTS AND INFORMATION AND REFERENCES TO THEM MAY NOT BE USED FOR CONSTRUCTION WITHOUT WRITTEN CONSENT.

COPYRIGHT 2006
WATKINS ASSOCIATES ARCHITECTS, INC.

SFES - FIRE STATION NO. 11

1066 MOHAWK STREET, SAVANNAH, GEORGIA
CHATHAM COUNTY

DRAWN BY	MAL
CHECKED BY	JT
DATE	04.03.10
REVISION DATE	05.16.10
PROJECT NO.	A010-102

C3.4